Models:

57000 - 3-1/2" Non-Vacuum
57001 - 3-1/2" Basic-Vacuum
57002 - 3-1/2" Deluxe-Vacuum
57003 - 3-1/2" Vac-Ready
57004 - 3-1/2" Central Vac-Ready
57015 - 5" Non-Vacuum
57016 - 5" Basic-Vacuum
57017 - 5" Deluxe-Vacuum
57018 - 5" Vac-Ready
57019 - 5" Central Vac-Ready
57021 - 5" Basic-Vac w/overskirt
57022 - 5" Deluxe-Vac w/overskirt
57023 - 5" Vac-Ready w/overskirt
57024 - 5" Central Vac-Ready w/overskirt
57026 - 6" Non-Vacuum
57027 - 6" Basic-Vacuum
57028 - 6" Deluxe-Vacuum
57029 - 6" Vac-Ready
57030 - 6" Central Vac-Ready
57032 - 6" Basic-Vacuum w/overskirt
57033 - 6" Deluxe-Vacuum w/overskirt
57034 - 6" Vac-Ready w/overskirt
57035 - 6" Central Vac-Ready w/overskirt

Parts Page Reorder No. PD00•39
Effective May, 2000
Supercedes PD97•21

Standard Grip Dynorbital® Supreme

3/16" Dia. Orbit, 10,000 RPM Random Orbital Sander

WARNING **Always operate, inspect and maintain this tool in accordance with the Safety Code for portable air tools (ANSI B186.1) and any other applicable safety codes and regulations. Please refer to Dynabrade's Warning/Safety Operating Instructions for more complete safety information.**

KEY

- **O** Oil: **O_1 = Air Lube**
- **A** Adhesive: **A_2 = Loctite #271**, **A_8 = Loctite #567**
- **T** Torque: **N•m x 8.85 = In. - lbs.**

Index Key

No.	Part #	Description
1	**95630**	Snap Ring
2	**57069**	Balancer Shaft
3	**95628**	Bearing Shield
4	**56053**	Bearing Seal
5	**56052**	Balancer Bearing
6	**Motor Shaft Balancer**	
	57060	3-1/2"
	57061	5"
	57062	6"
7	**56047**	Rotor Key
8	**57059**	Lock Ring Key
9	**95973**	Washer
10	**57055**	Front Ring
11	**57088**	Bearing
12	**57057**	Front Bearing Plate
13	**57113**	Blade/Rotor Set
14	**57058**	Cylinder Assembly (Incl. **95971** Line-up Pin)
15	**95971**	Line-up Pin
16	**57056**	Rear Bearing Plate
17	**01206**	Bearing
18	**57054**	Rear Ring
19	**95626**	Snap Ring
20	**57063**	Lever
21	**95979**	Pin
22	**01464**	Seal
23	**01472**	Tip Valve
24	**01468**	Conical Spring
25	**01494**	Inlet Bushing
26	**95697**	Snap Ring
27	**01025**	O-Ring (2)
28	**01477**	Valve Stem
29	**57064**	Speed Regulator
		or
	57053	Recessed Speed Reg.

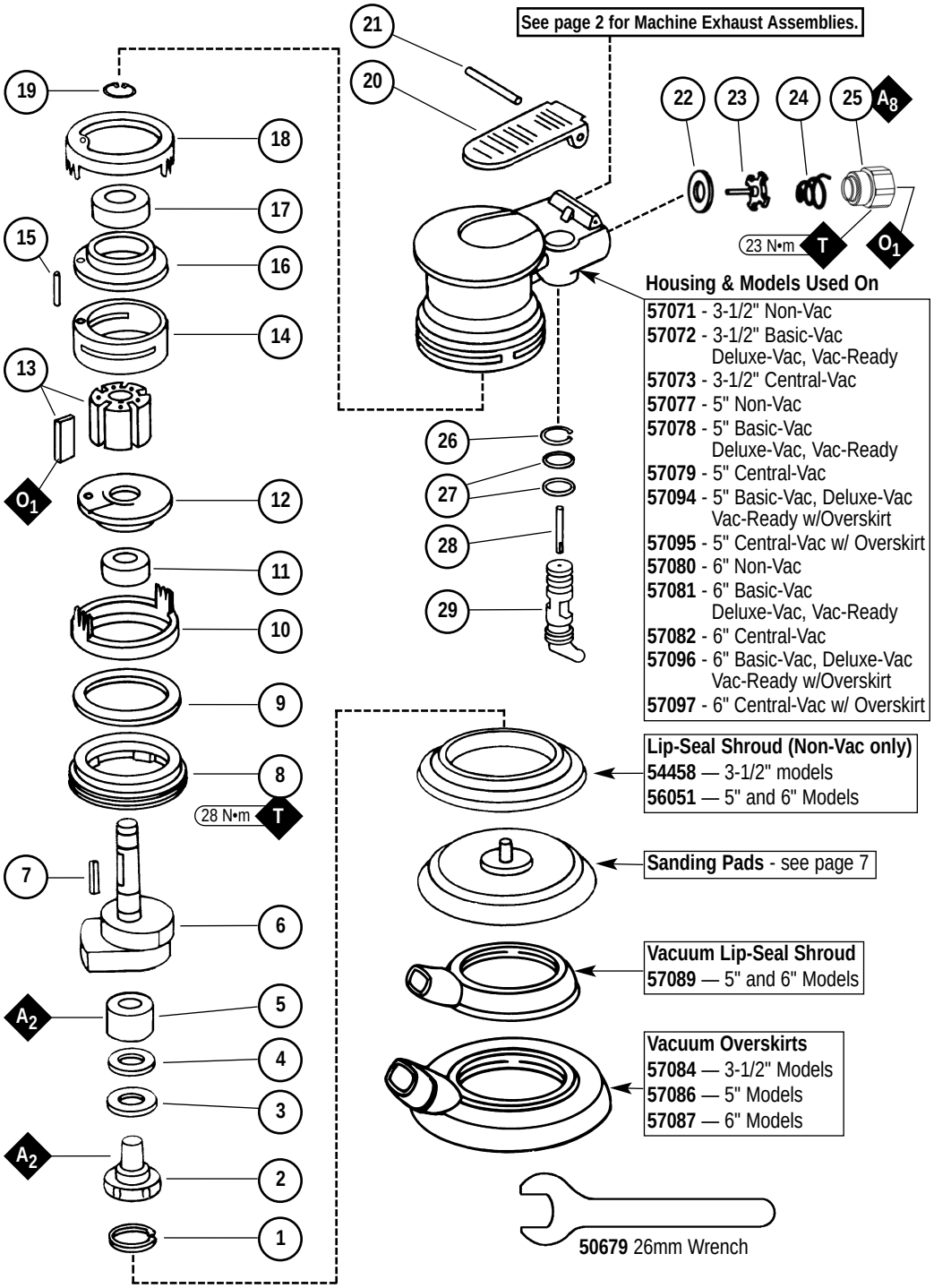

Note: To order replacement parts specify the model and serial number of your machine.

Machine Exhaust Assemblies

Self Generated Vacuum (Vac-Ready)/Machine Exhaust

For Models: 57001, 57002, 57003, 57016, 57017, 57018, 57021, 57022, 57023, 57027, 57028, 57029, 57032, 57033, 57034

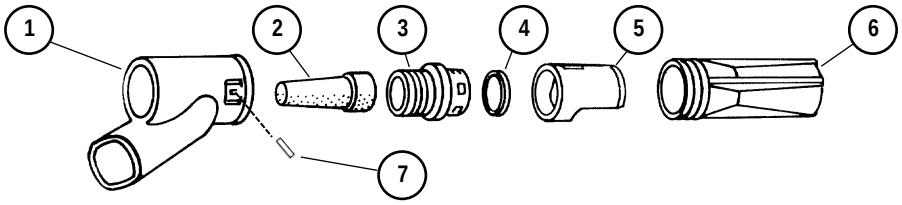

Central Vacuum/Machine Exhaust

For Models: 57004, 57019, 57024, 57030, 57035

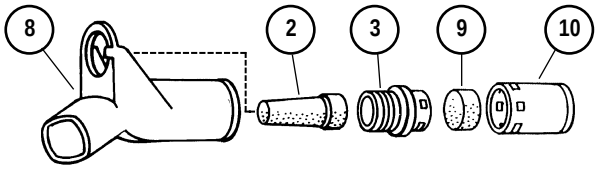

Non-Vacuum/Machine Exhaust

For Models: 57000, 57015, 57026

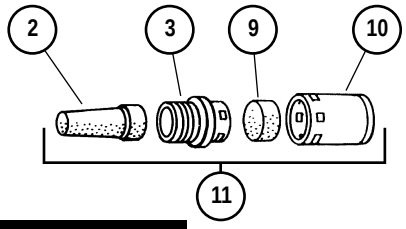

Index Key

No.	Part #	Description	No.	Part #	Description
1	**57083**	Vacuum Adapter	7	**96197**	Dowel Pin
2	**57065**	Cone Muffler	8	**57093**	Vacuum Adapter
3	**57066**	Muffler Body	9	**56027**	Muffler Insert (3)
4	**95526**	O Ring	10	**56028**	Muffler Cap
5	**57068**	Vac Nozzle	11	**57112**	Muffler Assembly
6	**57067**	Vac Tube			

Vacuum Conversion Instructions

To Disassemble:

1. Disconnect tool from power source. Invert machine and secure in vise, using **57092** Collar (supplied in **57098** Repair Kit) or padded jaws.
2. Remove sanding pad with **50679** (26 mm) Open-End Wrench (supplied with sander) and lip-seal shroud from housing.
3. Remove **56028** Muffler Cap and **56027** Muffler Insert (3) from **57066** Muffler Body. Using a 12 mm hex wrench (supplied in **57098** Repair Kit), remove muffler body and **57065** Cone Muffler from housing (not applicable for Self-Generated Vac to Central Vac).

Non-Vac to Self-Generated Vac for Hook-Up to Self-Contained Dust Collection System

1. Attach **57083** Vacuum Adapter to either **57086**, **57087** Vacuum Overskirts or **57089** Vacuum Lip-Seal Shroud. Then attach to the housing making sure the protrusions on the overskirt or shroud are aligned with the notches on the housing.
2. Place **95526** O-Ring on the muffler body between the shoulder and the four (4) protrusions. Using a 12 mm hex wrench, attach the muffler body, cone muffler and o-ring to the housing through the vacuum adapter.
3. Place vacuum nozzle into the vacuum adapter with the slots facing outward making sure that the knob on the nozzle is aligned with the slot in the adapter.
4. Place **57067** Vacuum Tube into the vacuum adapter with the grooves facing inward until the adapter “snaps” onto the tube and the tube cannot be pulled out. If the tube can be pulled out, rotate it 1/4 turn and place it back into the adapter until it “snaps”.
5. Rotate tube until holes line up. Insert dowel pin in holes until it is centered. Attach sanding pad, attach machine to portable dust collection system.

Non-Vac to Central Vac

1. Attach **57093** Vacuum Adapter to either **57086**, **57087** Vacuum Overskirts or **57089** Vacuum Lip-Seal Shroud. Then attach to the housing making sure the protrusions on the overskirt or shroud are aligned with the notches on the housing.
2. Using a 12 mm hex wrench, attach the muffler body and cone muffler to the housing through the central vacuum adapter.
3. Place muffler cap with inserts on muffler body making sure that the protrusions on the body fit in the pockets on the cap.
4. Attach weight-mated vacuum sanding pad with **50679** (26 mm) Open-End Wrench. Attach machine to central vacuum system.

Self-Generated Vac to Central Vac

1. Remove **96197** Dowel Pin with an 1/8" drive pin. Remove **57067** Vacuum Tube from **57083** Vacuum Adapter by turning it clockwise while pulling backward.
2. Using a small flat screwdriver, pry vacuum nozzle until it is loose and then remove it by using two fingers to push and pull it until it hits the “legs” on vacuum adapter. Place vacuum tube back into vacuum adapter far enough to push the “legs” back then push vacuum nozzle and vacuum tube out the rest of way.
3. Using a 12 mm hex wrench (supplied in **57098** Repair Kit), remove the **57066** Muffler Body, **57065** Cone Muffler and **95526** O-Ring from the housing through the adapter. Remove the o-ring from the muffler body.
4. Remove **57083** Vacuum Adapter and attach **57093** Vacuum Adapter to either **57086**, **57087** Vacuum Overskirts or **57089** Vacuum Lip-Seal Shroud. Then attach to the housing making sure that the protrusions on the overskirt or shroud are aligned with the notches on the housing.
5. Using a 12 mm hex wrench, attach the muffler body, cone muffler and o-ring to the housing through the central vacuum adapter.
6. Place muffler cap with inserts on muffler body making sure that the protrusions on the body fit in the pockets on the cap. Attach sanding pad.

Vacuum Conversion Instructions (continued)

Central Vac to Self Generated Vac

1. Remove **57093** Central Vacuum Adapter and put the **57083** Vacuum Adapter in its place.
2. Place **95526** O-Ring on the muffler body between the shoulder and the four (4) protrusions. Using a 12 mm hex wrench (supplied in **57098** Repair Kit), attach the muffler body, cone muffler and o-ring to the housing through the vacuum adapter.
3. Place vacuum nozzle into the vacuum adapter with the slots facing outward making sure that the knob on the nozzle is aligned with the slot in the adapter.
4. Place **57067** Vacuum Tube into the vacuum adapter with the grooves facing inward until the adapter "snaps" onto the tube and the tube cannot be pulled out. If the tube can be pulled out, rotate it 1/4 turn and place it back into the adapter until it "snaps".
5. Rotate tube until holes line up. Insert **96197** Dowel Pin in holes until it is centered. Attach machine to portable dust collection system.

Important Operating, Maintenance and Safety Instructions

Carefully read all instructions before operating or servicing any Dynabrade® Abrasive Power Tool.
Warning: Hand, wrist and arm injury may result from repetitive work motion and overexposure to vibration.
Important: All Dynabrade Rotary Vane air tools must be used with a Filter-Regulator-Lubricator to maintain all warranties.

Operating Instructions:

Warning: Eye, face, respiratory, sound and body protection must be worn while operating power tools. Failure to do so may result in serious injury or death. Follow safety procedures posted in workplace.

1. With power source disconnected from tool, securely fasten abrasive/accessory on tool.
2. Install air fitting into inlet bushing of tool. **Important:** Secure inlet bushing of tool with a wrench before attempting to install the air fitting to avoid damaging valve body housing.
3. Connect power source to tool. Be careful not to depress throttle lever in the process.
4. Check tool speed with tachometer. If tool is operating at a higher speed than the RPM marked on the tool or operating improperly, the tool should be serviced to correct the cause before use.

Maintenance Instructions:

1. Check tool speed regularly with a tachometer. If tool is operating at a higher speed than the RPM marked on the tool, the tool should be serviced to correct the cause before use.
2. Some silencers on air tools may clog with use. Clean and replace as required.
3. All Dynabrade air motors should be lubricated. Dynabrade recommends one drop of air lube per minute for each 10 SCFM (example: if the tool specification states 40 SCFM, set the drip rate of your filter-lubricator at 4 drops per minute).
   Dynabrade Air Lube (P/N **95842**: 1pt. 473ml.) is recommended.
4. An Air Line Filter-Regulator-Lubricator must be used with this air tool to maintain all warranties. Dynabrade recommends the following: **11405** Air Line Filter-Regulator-Lubricator — Provides accurate air pressure regulation, two-stage filtration of water contaminants and micro-mist lubrication of pneumatic components. Operates 40 SCFM @ 100 PSIG has 3/8" NPT female ports.
5. Use only genuine Dynabrade replacement parts. To reorder replacement parts, specify the **Model #**, **Serial #**, and **RPM** of your machine.
6. A Motor Tune-Up Kit (P/N **96024**) is available which includes assorted parts to help maintain motor in peek operating condition.
7. Mineral spirits are recommended when cleaning the tool and parts. Do not clean tool or parts with any solvents or oils containing acids, esters, keytones, chlorinated hydrocarbons or nitro carbons.

Safety Instructions:

Products offered by Dynabrade should not be converted or otherwise altered from original design without expressed written consent from Dynabrade, Inc.

- **Important:** User of tool is responsible for following accepted safety codes such as those published by the American National Standards Institute (ANSI).
- Operate machine for one minute before application to workpiece to determine if machine is working properly and safely before work begins.
- Always disconnect power supply before changing abrasive/accessory or making machine adjustments.
- Inspect abrasives/accessories for damage or defects prior to installation on tools.
- Please refer to Dynabrade's Warning/Safety Operating Instructions Tag (Reorder No. **95903**) for more complete safety information.

Notice

All Dynabrade motors use the highest quality parts and metals available and are machined to exacting tolerances. The failure of quality pneumatic motors can most often be traced to an unclean air supply or the lack of lubrication. Air pressure easily forces dirt or water contained in the air supply into motor bearings causing early failure. It often scores the cylinder walls and the rotor blades resulting in limited efficiency and power. Our warranty obligation is contingent upon proper use of our tools and cannot apply to equipment which has been subjected to misuse such as unclean air, wet air or a lack of lubrication during the use of this tool.

One Year Warranty

Following the reasonable assumption that any inherent defect which might prevail in a product will become apparent to the user within one year from the date of purchase, all equipment of our manufacture is warranted against defects in workmanship and materials under normal use and service. We shall repair or replace at our factory, any equipment or part thereof which shall, within one year after delivery to the original purchaser, indicate upon our examination to have been defective. Our obligation is contingent upon proper use of Dynabrade tools in accordance with factory recommendations, instructions and safety practices. It shall not apply to equipment which has been subject to misuse, negligence, accident or tampering in any way so as to affect its normal performance. Normally wearable parts such as bearings, contact wheels, rotor blades, etc., are not covered under this warranty.

Motor Assembly/Disassembly Instructions – Dynorbital® Supreme Sander

Important: Manufacturers warranty is void if tool is disassembled before warranty expires.
A complete Repair Kit, part number **57098**, is available which includes special tools for correct disassembly/assembly of tool.

To Disassemble

1. Disconnect tool from power source.
2. Invert machine and secure in vice, using **57092** Collar (supplied in **57098** Repair Kit) or padded jaws.
3. Remove sanding pad with 26 mm open-end wrench (supplied with sander) and shroud or overskirt.
4. Insert **56058** Lock Ring Tool (supplied in **57098** Repair Kit) into corresponding tabs of lock ring and unscrew. Motor may now be lifted out for service.
   Note: To get it started try using 26 mm wrench for leverage or rock the motor back and forth to loosen up the rings.
5. Remove lock ring, washer, front ring and rear ring from motor. Upper motor may now be disassembled. Remove **95626** Snap Ring.
6. Remove the rear plate and the cylinder assembly by securing the cylinder in a bearing separator gripped on the cylinder exhaust and extra pocket area. Push the motor shaft balancer through the bearing.
7. Remove the rotor, vanes and rotor key from the motor shaft balancer. Remove the front plate using a small (#2) arbor press. Support the edges of the front plate while pressing on the small end of the motor shaft balancer.
8. **a.)** If, during step 7, the front plate and **57088** Bearing remain together, press **57088** Bearing out of the front plate using **57091** Press Tool (supplied in **57098** Repair Kit) as shown in **Drawing 1.**
   b.) If, during step 7, the front plate and **57088** Bearing remains on the motor shaft balancer, it can be removed with a bearing separator.
9. Remove **01206** Bearing from the rear plate by using a bearing press tool.
10. Disassemble the balancer assembly as follows:
    a.) Place motor shaft assembly into a soft jaw vise. Using a thin screwdriver, pick out the end of **95630** Snap Ring and peel out. This will loosen the balancer assembly.
    b.) Screw the threaded portion of the **56056** Bearing Puller (supplied in **57098** Repair Kit) into the **57069** Balancer Shaft and heat the outside of the motor shaft balancer to approximately 200° F (approximately 10 seconds with a propane torch). Now, using the slider weight, pull the assembly out.
    c.) Press off **56052** Bearing with a bearing separator and remove bearing seal and bearing shield.
11. If during step 10, the **56052** Bearing remains in the motor shaft balancer, it can be removed by the heating the shaft balancer again and using either an inside bearing puller or a blind hole bearing puller.

Drawing 1

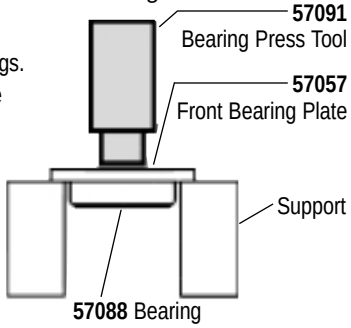

To Assemble:

Important: Be certain parts are clean and in good repair before assembling.

1. Assemble the balancer assembly as follows:
   a.) Install **95630** Snap Ring onto balancer shaft. Install **95628** Shield with convex face toward hex of balancer shaft.
   b.) Install **56053** Seal. **Note:** Be certain seal is pressed completely over shaft step.
   c.) Apply 1 drop of #271 Loctite® (or equivalent) and spread over several places around the inside diameter of the **56052** Bearing and the outside diameter of the **57069** Balancer Shaft.
   d.) Press fit **56052** Bearing with seal side toward hex of balancer shaft up to shaft step as shown in **Drawing 2**. This must be a firm press fit for proper retention of bearing.
2. Place the motor shaft balancer in a soft jaw vise with large end-up.
3. Apply 1 drop of #271 Loctite® (or equivalent) and spread over several places around the outside diameter of the **56052** Bearing and slide balancer assembly into the motor shaft balancer until **56052** Bearing is firmly seated at bottom. Squeeze **95630** Snap Ring into groove in motor shaft balancer to complete the assembly. Remove from vise.
4. Press **57088** Bearing onto the motor shaft balancer down to the shoulder as shown in **Drawing 3**.
5. Press **57057** Front Bearing Plate onto **57088** Bearing as shown in **Drawing 4** and check for smooth rotation.
6. Place the **57090** Rotor and **56047** Rotor Key on the motor shaft balancer. Place the **56073** Vanes into the rotor slots. **Note:** Vanes should be lightly lubricated with Dynabrade Air Lube P/N **95842** (or equivalent) before installation.
7. Place **57058** Cylinder Assembly over rotor. The "short" line-up pin goes toward the front plate.
8. Place **57056** Rear Bearing Plate (with **01206** Rear Bearing pressed into place) over shaft and "long" end of line-up pin and press fit in place as shown in **Drawing 5**.
9. Place **95626** Snap Ring in groove.
10. Place **57054** Rear Ring over the rear plate and line-up pin. Turn the motor over and place **57055** Front Ring over the front plate making sure that the "legs and fingers" on the front and rear rings line-up. Also the small cut-outs on both rings should line-up with the square holes in the cylinder/end plate assembly.
11. Place **95973** Washer and **57059** Lock Ring onto the front ring with 1 drop of pneumatic tool oil spread between the washer and lock ring.
12. Secure motor housing in vise, using **57092** Collar or padded jaws. Spread 2-3 drops of pneumatic tool oil around the housing bore for ease of insertion of motor assembly. Slide motor assembly into secured housing.
    Note: Be certain line-up pin enters the pocket in the bottom of the housing and the "legs" of the rings stay in line.
13. Tighten lock ring with **56058** Lock Ring Tool to 28 N•m/250 in. - lbs. Attach shroud or overskirt and weight-mated sanding pad.

Drawing 2

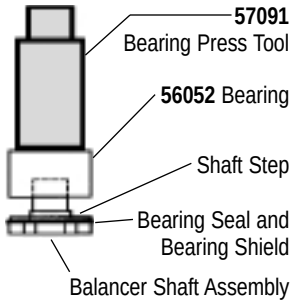

Drawing 3

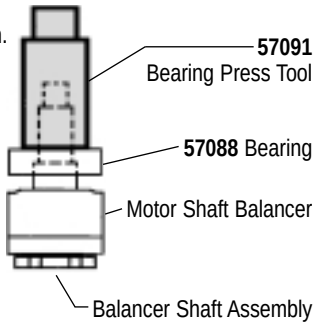

Tool Assembly Complete. Please allow 30 minutes for adhesives to cure before operating tool.

(continued on next page)

Drawing 4

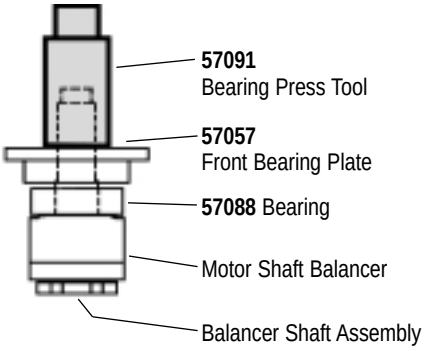

Drawing 5

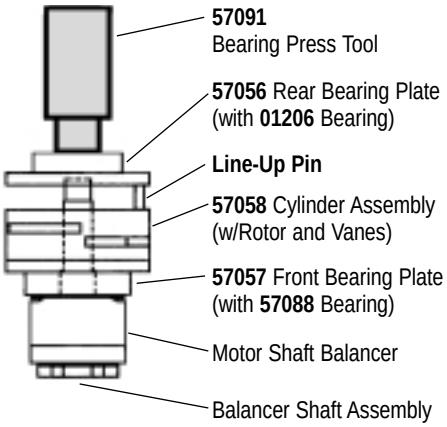

Valve and Speed Regulator Assemblies:

1. Secure housing in vice using **57092** Collar or padded jaws.
2. Remove inlet bushing, **01468** Spring, **01472** Tip Valve and **01464** Seal from housing.
3. Remove **95697** Snap Ring. Press the spread regulator and valve stem out of the housing. Remove the **01025** O-Rings (2).
4. Place new **01025** O-Rings (2) on the speed regulator and place in housing with valve stem. Install new **95967** Snap Ring.
5. Place new **01464** Seal in housing. Using tweezers or needle nose pliers, place the tip valve into housing so that the pin goes through the valve stem hole. Place new **01468** Spring into housing so small end is towards tip valve.
6. Spread small amount of #567 Loctite® (or equivalent) around the threads of the first inlet bushing and tighten into housing to 23 N•m/200 in. - lbs.

Note: Motor should operate at between 9,500 and 10,000 RPM at 6.2 bar (90 PSIG). RPM should be checked with a reed tachometer. Before operating, we recommend that 2-3 drops of Dynabrade Air Lube P/N **95842** (or equivalent) be placed directly into the air inlet with throttle lever depressed. Operate the machine for approximately 30 seconds before application to workpiece to determine if machine is working properly and safely and to allow lubricating oils to properly dispense through machine.

Loctite® is a registered trademark of the Loctite Corp.

Disc Pad Change:

1. Insert **50679** Wrench on flats of **57069** Balancer Shaft and twist off sanding pad by hand.
2. With wrench still in place, hand tighten new pad on tool.
3. No need to remove shroud or overskirt.

Required Weight of Pads:

3-1/2" Models — Use pad weighing 80g.

5" Models — Use pad weighing 100g.

6" Models — Use pad weighing 130g.

Optional Accessories

96024 Motor Tune-Up Kit:
Includes assorted parts to help maintain and repair motor.

57098 Motor Repair Kit:
Includes special tools for proper disassembly/assembly of the Dynorbital® Supreme.

Self-Contained Dust Collection Systems

Easily attach to Dynorbital® Supreme Random Orbital Sander – Self-Generated Vac-Ready Models.

50694 Mini-Reusable Felt Bag
- Mounts directly to any Vac-Ready tool or to any exhaust hose.
- Measures 11" long x 3" wide. End opens up - no need to remove bag from tool when emptying.

50683 Reusable Felt Bag
- Hook 'n loop end for easy emptying.
- Measures 14-1/2" L x 7-1/2" W.
- Connects to vacuum hose.

56304 Reusable Felt Bag w/Zipper
- Has zipper-lock end.
- Measures 14-1/2" L x 7-1/2" W.
- Connects to vacuum hose.

95986 Hose Cover (5' long cloth cover)
- Covers air line and exhaust/vacuum hoses (not included).
- Eliminates damage from hoses dragging on the workpiece.

54284 Mini-Flex-Hose System
- **95580** Air Line 1" dia. x 28" long.
- **50638** Flex-Hose 1" dia. x 18" long.
- **50694** Mini-Reusable Felt Bag.
- **95362** Rubber Connectors (3) which connect air line to exhaust hose.

50617 & 56303 – 6' Long Flex-Hose
- Both systems include 6' long **50682** Flex-Hose.
- Shown with optional **95361** Air Line (1/4" diameter).

50617: Has **50683** Standard Reusable Felt Bag with hook 'n loop end for easy emptying.

56303: Has **56304** Zipper-Lock Bag.

54290 "Bag-in-Box" System
- **95361** Air Line 5' long.
- **50682** Flex-Hose 1" dia. x 6' long.
- **95362** Rubber Connectors (5, attach air line to vacuum hose).
- **95575** Durable Box Receptacle (to house bag and store tool).
- Sample paper bag included. Paper bag reorder: **50692** (400/case) or **50693** (24 per package.)

Machine Specifications

Model Number	Motor HP (W)	Motor RPM	Dia. Orbit Inch (mm)	Sound Level	Air Flow Rate CFM/SCFM (LPM)	Air Pressure PSIG (Bars)	Spindle Thread	Weight Pound (kg)	Length Inch (mm)	Height Inch (mm)
57000	.21 (156)	10,000	3/16" (5)	76 dB(A)	2/16 (453)	90 (6.2)	5/16"-24 female	2.1 (1.0)	6 (152)	3-3/4 (95)
57001	.21 (156)	10,000	3/16" (5)	83 dB(A)	2/16 (453)	90 (6.2)	5/16"-24 female	2.1 (1.0)	8-1/4 (210)	3-3/4 (95)
57002	.21 (156)	10,000	3/16" (5)	76 dB(A)	2/16 (453)	90 (6.2)	5/16"-24 female	2.1 (1.0)	8-1/4 (210)	3-3/4 (95)
57003	.21 (156)	10,000	3/16" (5)	83 dB(A)	2/16 (453)	90 (6.2)	5/16"-24 female	2.1 (1.0)	8-1/4 (210)	3-3/4 (95)
57004	.21 (156)	10,000	3/16" (5)	76 dB(A)	2/16 (453)	90 (6.2)	5/16"-24 female	2.1 (1.0)	7 (178)	3-3/4 (95)
57015	.21 (156)	10,000	3/16" (5)	78 dB(A)	2/16 (453)	90 (6.2)	5/16"-24 female	2.1 (1.0)	6-1/2 (165)	3-5/8 (92)
57016	.21 (156)	10,000	3/16" (5)	81 dB(A)	2/16 (453)	90 (6.2)	5/16"-24 female	2.1 (1.0)	8-1/2 (216)	3-5/8 (92)
57017	.21 (156)	10,000	3/16" (5)	84 dB(A)	2/16 (453)	90 (6.2)	5/16"-24 female	2.1 (1.0)	8-1/2 (216)	3-5/8 (92)
57018	.21 (156)	10,000	3/16" (5)	81 dB(A)	2/16 (453)	90 (6.2)	5/16"-24 female	2.1 (1.0)	8-1/2 (216)	3-5/8 (92)
57019	.21 (156)	10,000	3/16" (5)	78 dB(A)	2/16 (453)	90 (6.2)	5/16"-24 female	2.2 (1.0)	7-1/4 (184)	3-5/8 (92)
57021	.21 (156)	10,000	3/16" (5)	83 dB(A)	2/16 (453)	90 (6.2)	5/16"-24 female	2.2 (1.0)	8-3/4 (222)	3-5/8 (92)
57022	.21 (156)	10,000	3/16" (5)	84 dB(A)	2/16 (453)	90 (6.2)	5/16"-24 female	2.2 (1.0)	8-3/4 (222)	3-5/8 (92)
57023	.21 (156)	10,000	3/16" (5)	83 dB(A)	2/16 (453)	90 (6.2)	5/16"-24 female	2.2 (1.0)	8-3/4 (222)	3-5/8 (92)
57024	.21 (156)	10,000	3/16" (5)	79 dB(A)	2/16 (453)	90 (6.2)	5/16"-24 female	2.2 (1.0)	7-1/2 (191)	3-5/8 (92)
57026	.21 (156)	10,000	3/16" (5)	79 dB(A)	2/16 (453)	90 (6.2)	5/16"-24 female	2.2 (1.0)	7 (178)	3-1/2 (89)
57027	.21 (156)	10,000	3/16" (5)	79 dB(A)	2/16 (453)	90 (6.2)	5/16"-24 female	2.2 (1.1)	9 (229)	3-1/2 (89)
57028	.21 (156)	10,000	3/16" (5)	84 dB(A)	2/16 (453)	90 (6.2)	5/16"-24 female	2.2 (1.1)	9 (229)	3-1/2 (89)
57029	.21 (156)	10,000	3/16" (5)	79 dB(A)	2/16 (453)	90 (6.2)	5/16"-24 female	2.2 (1.1)	9 (229)	3-1/2 (89)
57030	.21 (156)	10,000	3/16" (5)	79 dB(A)	2/16 (453)	90 (6.2)	5/16"-24 female	2.2 (1.1)	7-3/4 (197)	3-1/2 (89)
57032	.21 (156)	10,000	3/16" (5)	85 dB(A)	2/16 (453)	90 (6.2)	5/16"-24 female	2.4 (1.0)	9-1/4 (235)	3-1/2 (89)
57033	.21 (156)	10,000	3/16" (5)	83 dB(A)	2/16 (453)	90 (6.2)	5/16"-24 female	2.4 (1.1)	9-1/4 (235)	3-1/2 (89)
57034	.21 (156)	10,000	3/16" (5)	85 dB(A)	2/16 (453)	90 (6.2)	5/16"-24 female	2.4 (1.1)	9-1/4 (235)	3-1/2 (89)
57035	.21 (156)	10,000	3/16" (5)	79 dB(A)	2/16 (453)	90 (6.2)	5/16"-24 female	2.4 (1.0)	8 (203)	3-1/2 (89)

Additional Specifications: Air Inlet Thread 1/4" NPT • Hose I.D. Size 1/4" (8 mm)

Random Orbital Sanding Pads

Perfectly balanced and weight-mated to Dynorbital® Supreme Random Orbital Sander.

Premium Urethane Pad - Vinyl Face for PSA-Type Discs

Pad Description	3-1/2" Dual Purpose	5" Non-Vac	5" Vac	6" Non-Vac	6" Vac
3/8" Thick, Soft Density	—	56102	56100	56103	56101
3/8" Thick, Medium Density	—	56106	56104	56107	56105
5/8" Thick, Soft Density	56097	56185	56186	56187	56188
5/8" Thick, Medium Density	56098	56175	56176	56177	56178

- Premium urethane pads, available in soft or medium density, resist heat build-up.
- New 5/8" thick pads, ideal for sanding of intricate contours.
- Unique vinyl surface pads provide excellent disc adhesion, allowing for quick removal of used discs.

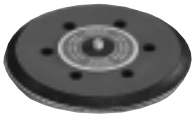

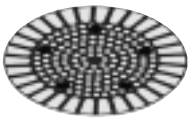

Rubber Pad, Medium Density - Vinyl Face Pads for PSA-Type Discs

Pad Description	3-1/2" Dual Purpose	5" Non-Vac	5" Vac	6" Non-Vac	6" Vac
1/2" Thick, “Diamond Pattern Face”	—	50630	50631	50632	50633
1/2" Thick, “Post Pattern Face”	—	—	50695	—	50696

- Special rubber/vinyl face pads for PSA discs.
- “Post Pattern” design for enhanced vacuum pick-up.
- Unique vinyl surface pads provide excellent disc adhesion, allowing for quick removal of used discs.
- No need to align vacuum holes, saves time on disc changes.

Premium Urethane Pad - Hook Face Short Nap Pads for Scrim-Back Discs

Pad Description	3-1/2" Dual Purpose	5" Non-Vac	5" Vac	6" Non-Vac	6" Vac
3/8" Thick, Soft Density	—	56157	56155	56158	56156
3/8" Thick, Medium Density	—	54325	54326	54327	54328
5/8" Thick, Soft Density	54311	56195	56196	56197	56198
5/8" Thick, Medium Density	54313	56180	56181	56182	56183

- Hook face “short nap” pads for reattachable discs.

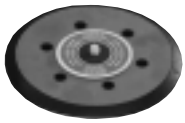

Rubber, Medium Density - Hook Face Long Nap Pads for Non-Woven Nylon Discs

Pad Description	3-1/2" Dual Purpose	5" Non-Vac	5" Vac	6" Non-Vac	6" Vac
1/2" Thick, Medium Density	54314	50605	50607	50606	50610

- Hook face “long nap” pads for Abrasive Impregnated Non-Woven Nylon Discs.

- 3-1/2", 5" and 6" diameter disc pads have 5/16"-24 male threaded stud.
- The 3-1/2" diameter discs, without holes, can be used on vacuum and non-vacuum 3-1/2" Dynorbital® Supreme Sanders.

Coated Abrasive Discs

Silicon Carbide Discs / PSA Mounted

Disc Type	Abrasive Grit 80	100	120	150	180	220
5" Diameter						
No Holes	93051	93052	93053	93054	93055	93056
5-Hole Pattern	93060	93061	93062	93063	93064	93065
6" Diameter						
No Holes	93069	93070	93071	93072	93073	93074
6-Hole Pattern	93077	93078	93079	93080	93081	93082

Note: Other grits available upon request.

All Discs: 120 Grit and Coarser – 125/Roll; 8 Rolls = Unit.
150 Grit & Finer – 250/Roll; 4 Rolls = Unit. Complete rolls only.

Premium Aluminum Oxide Discs / PSA Mounted

Disc Type	Abrasive Grit 80	100	120	150	180	220	320
3-1/2" Diameter							
*No Holes	92090	–	92092	–	92094	92095	92097
5" Diameter							
No Holes	93101	93102	93103	93104	93105	93106	–
5-Hole Pattern	93109	93110	93111	93112	93113	93114	–
6" Diameter							
No Holes	93200	93201	93202	93203	93204	93205	–
6-Hole Pattern	93215	93216	93217	93218	93219	93220	–

Note: Other grits available upon request.

*Used on either vacuum or non-vacuum 3-1/2" sander.

All Discs: 120 Grit and Coarser – 125/Roll; 10 Rolls = Unit.
150 Grit and Finer – 175/Roll; 6 Rolls = Unit. Complete rolls only.

DYNABRADE®

Toll Free (U.S.A.) 1-800-828-7333
Toll Free (Can.) 1-800-344-1488

Visit Our Web Site: www.dynabrade.com **Email:** Customer.Service@Dynabrade.com

DYNABRADE, INC., 8989 Sheridan Drive • Clarence, NY 14031-1490 • Phone: (716) 631-0100 • Fax: 716-631-2073 • International Fax: 716-631-2524
DYNABRADE EUROPE S.àr.l., Zone Artisanale • L-5485 Wormeldange—Haut, Luxembourg • Telephone: 352 76 84 94 1 • Fax: 352 76 84 95 1

© DYNABRADE, INC., 2000

PRINTED IN USA